DETAIL DIMENSIONS

Measurements in cm

8766

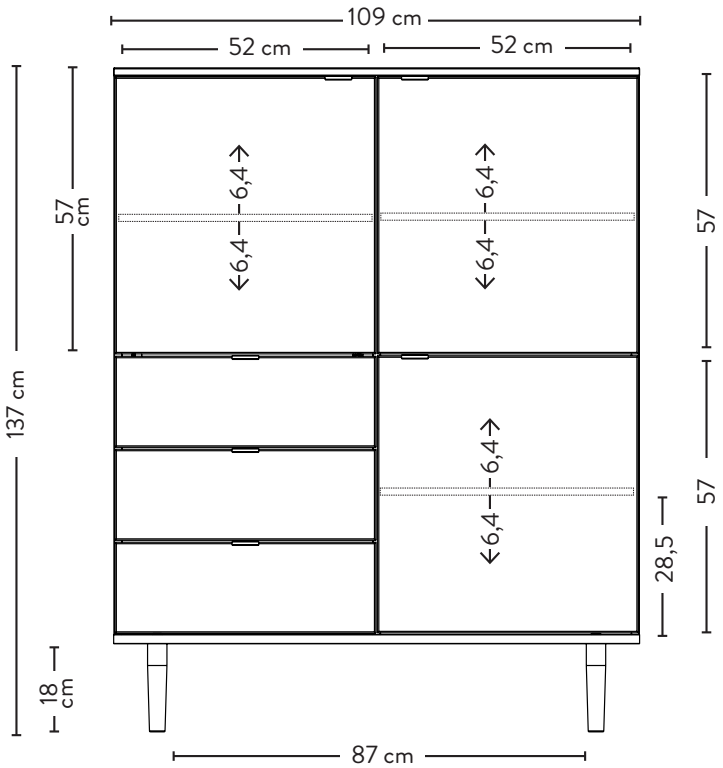

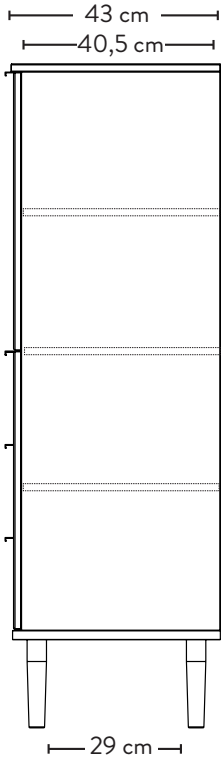

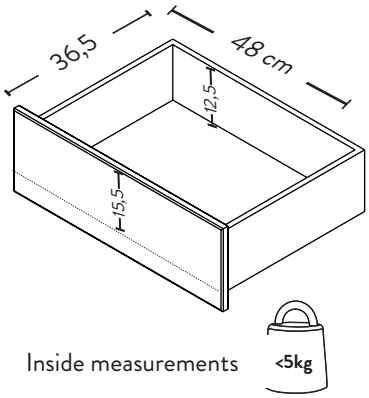

tenzo®