ASSEMBLY INSTRUCTIONS FOR CABINET

ITEM CODE-10811 SIZE- 80 x 40 x 80 CM		
A		*1*
B		*2*
C	*8x35 MM*	*6*
D	*5 MM*	*1*

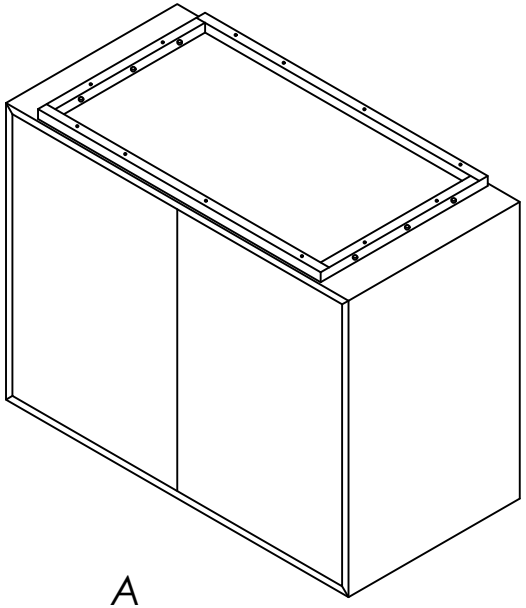

A

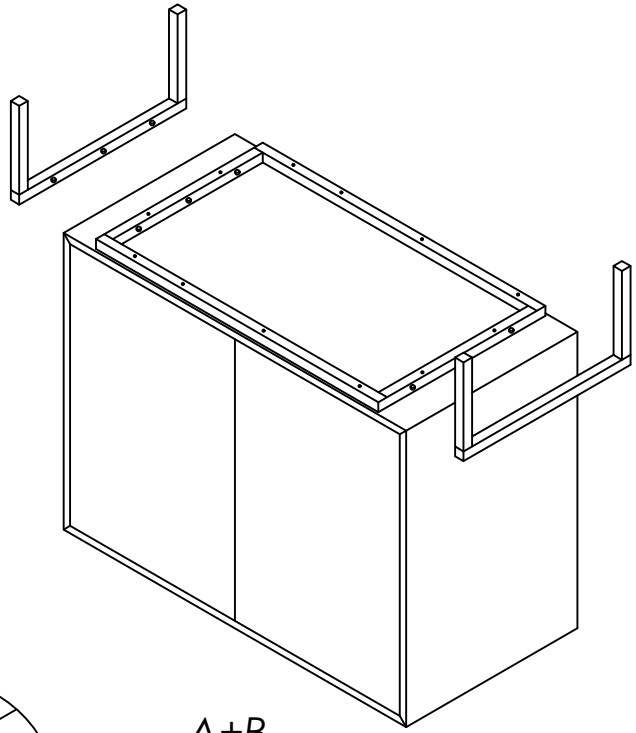

A+B

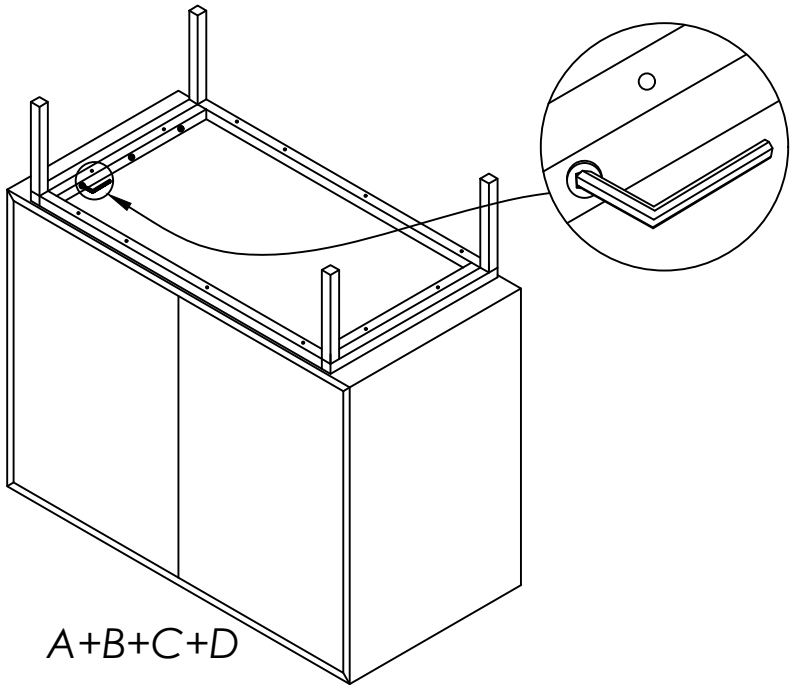

A+B+C+D

